CCT & Power Selectable

ITEM SKU#: 662187478876

Novus Architectural Flood Light

INDUSTRIAL LIGHTING | FLOOD LIGHTS

FEATURES

- CCT & power selectable functionality ensures flexibility in applications for users.
- High-efficacy luminaire (125 lm/W) with exceptional lumen output to light up the area right.
- Unique design with a strong, extruded lamp body.
- IP65 rating makes it suitable for wet locations.
- Dimming capability gives the user better control of the lighting.
- Solid aluminum housing with excellent heat dissipation.

APPLICATIONS

Outdoor Illumination Needs, Including Parking Lots, Auto Dealerships, Pathways, Roadways, Recreational Venues, and Other General Areas; Can Also be Used as Flood Lights.

PRODUCT DETAILS

ELECTRICAL

Max Power	55 W
Voltage	120-277 V
Current	0.22 A
Power Factor	15 %
Total Harmonic Distortion (THD)	0.9
Surge Protection	4/6 kV

LIGHTING PERFORMANCE

Lumens	1875 lm-3750 lm-6875 lm
Efficacy	125 lm/W
Color Temperature (CCT)	3000 K-4000 K-5000 K
Color Rendering (CRI)	84
R9 (Red Value)	9
R13 (Skin Tones)	2
Beam Angle	30°
Light Distribution	Type I - Very Short
BUG Rating (Backlight, Uplight, and Glare)	B3-U0-G1
Dimmable Lighting Control	Continuous Dimming to 10% or Below

ENVIRONMENT

Operating Temperature	-22 °F ~ +113 °F
Suitable Location	**WET**
Ingress Protection Rating (IP)	IP65
Impact Protection Rating (IK)	IK08

LIFESPAN

Average Life (Hours)	50,000
Warranty (Years)	**5**

COMPONENTS

LED Light Source	2835
Driver	BQE60A-130-PVF-Z

CONSTRUCTION

Housing	Die-Cast Aluminum
Cover Material / Lens	UV Stabilized Polycarbonate
Diffuser	Clear
Finish	Bronze
Effective Projected Area (EPA)	0.14 ft²

PART NUMBER & QUALIFICATIONS

Ordering Part Number	IK-FL05-55W-X-3CCT
Qualified Part Number	IK-FL05-55W-[CS,CSM,CSP]-3CCT
SKU Number	662187478876

DLC LISTED PREMIUM RoHS

Not all product variations listed on this page are DLC qualified. Visit https://www.designlights.org/qpl to confirm qualification.

info@ikioledlighting.com | +1 844-533-4546 | www.ikioledlighting.com

© 2022 IKIO LED LIGHTING. All Rights Reserved. Products and technologies in this document may be covered by one or more Patents Pending.

The product images shown are for illustration purposes only and may not be an exact representation of the product. Specifications subject to change without notice.

DIMENSIONS AND WEIGHT

Length (Inches)	8.97"
Width (Inches)	4.52"
Height (Inches)	7.94"
Depth (Inches)	3.49"
Net Weight (lbs)	4.10

PACKAGING

Box Dimensions (Inches)	17.35" x 8.07" x 9.25"
Box Weight (lbs)	18.56
Quantity Per Box	4

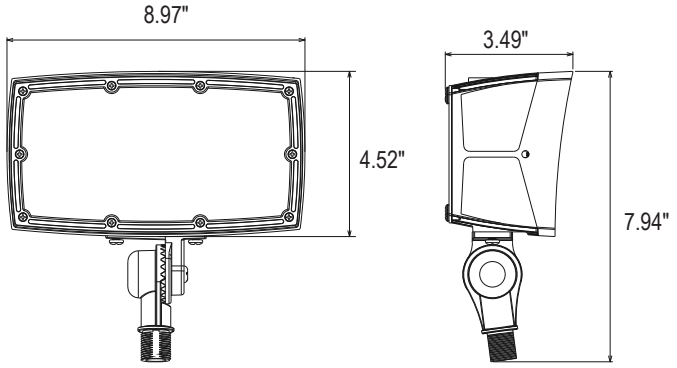

SUPPORTING DOCUMENTS

DOCUMENTS	DOCUMENT LINK
Product Sheet	View / Download
IES Files	View / Download
LM80 Report	View / Download
Installation Instructions	View / Download

ORDERING INFORMATION

SKU NUMBER	DESCRIPTION	QUANTITY/BOX
662187478876	**NOVUS AFL:** 55 W / 1875-3750-6875 LM / 30-40-50 K / 120-277 V / BRONZE	4

© 2022 IKIO LED LIGHTING. All Rights Reserved. Products and technologies in this document may be covered by one or more Patents Pending.
The product images shown are for illustration purposes only and may not be an exact representation of the product. Specifications subject to change without notice.