ITEM SKU#: 662187461618

Dynamo 3

Stadium Flood Light

INDUSTRIAL LIGHTING | FLOOD LIGHTS

FEATURES

- Superior aesthetics with a modern look.
- Excellent heat management system courtesy of multiple vents.
- 240° adjustable angle.
- Multi-faceted optic design to distribute light evenly and reduce glare.
- Resistant to electrical interference due to high quality chip.

APPLICATIONS

Stadiums, Sports Fields, High Mast Lighting, Light Towers, or Ports.

PRODUCT DETAILS

ELECTRICAL

Power	400 W
Voltage	100-277 V
Current	1.45 A
Power Factor	0.997
Total Harmonic Distortion (THD)	10.5%
Surge Protection	10 kV

LIGHTING PERFORMANCE

Lumens	61183.49 lm
Efficacy	153.6 lm/W
Color Temperature (CCT)	3000 K
Color Rendering (CRI)	73.7
R9 (Red Value)	-22
R13 (Skin Tones)	73
Beam Angle	30°
Light Distribution	Type I, Very Short
BUG Rating (Backlight, Uplight, and Glare)	B5-U3-G2
Dimmable Lighting Control	Continuous Dimming to 10% or Below

ENVIRONMENT

Operating Temperature	-22 ºF ~ +122 ºF
Suitable Location	**WET**
Ingress Protection Rating (IP)	IP66
Impact Protection Rating (IK)	IK08

LIFESPAN

Average Life (Hours)	100,000
Warranty (Years)	**10**

COMPONENTS

LED Light Source	LUMILEDS
Driver	INVENTRONICS

CONSTRUCTION

Housing	Die-cast aluminum
Cover Material / Lens	PC
Diffuser	Clear
Base / Power Supply	Hard Wire
Finish	Black
Effective Projected Area (EPA)	1.59 ft²
Wind Shear Rating	127.5 mph

PART NUMBER & QUALIFICATIONS

Ordering Part Number	IK-SLEL2-0400-D-30 (30D)
Qualified Part Number	Not Qualified Yet
SKU Number	662187461618

RoHS c UL us LISTED

info@ikioledlighting.com | +1 844-533-4546 | www.ikioledlighting.com

© 2023 IKIO LED LIGHTING. All Rights Reserved. Products and technologies in this document may be covered by one or more Patents Pending.

The product images shown are for illustration purposes only and may not be an exact representation of the product. Specifications subject to change without notice.

Dynamo 3 Stadium Flood Light

DIMENSIONS AND WEIGHT

Width (Inches)	16.33"
Height (Inches)	19.65"
Diameter (Inches)	15.94"
Net Weight (lbs)	27.55

PACKAGING

Box Dimensions (Inches)	17.71" x 17.71" x 13.97"
Box Weight (lbs)	31.96
Quantity Per Box	1

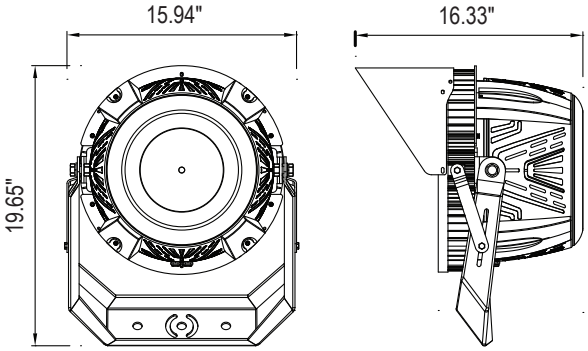

SUPPORTING DOCUMENTS

DOCUMENTS	DOCUMENT LINK
Product Sheet	View / Download
IES Files	View / Download
LM79 Report	View / Download
LM80 Report	View / Download
Installation Instructions	View / Download

ORDERING INFORMATION

SKU NUMBER	DESCRIPTION	QUANTITY/BOX
662187461618	**DYNAMO 3 SFL :** 400 W / 61183.49 LM / 3000 K / 100-277 V / BLACK	1

ACCESSORIES

INCLUDED IN THE BOX

SKU NUMBER	PRODUCT CODE	DESCRIPTION	DOCUMENT LINK
662187477060	IK-ACC-SHIELD	**SHIELD**	View / Download
662187477213	IK-ACC-YKMT	**YOKE MOUNT KIT**	View / Download

SOLD SEPARATELY

SKU NUMBER	PRODUCT CODE	DESCRIPTION	DOCUMENT LINK
662187477190	IK-ACC-SFMB	**SLIP FITTER MOUNTING BRACKET**	View / Download
662187478821	IK-ACC-LAD	**LASER AIMING DEVICE**	View / Download
662187479576	IK-ACC- CNV-SNAP-AN0	**SYNAPSE- WIRELESS CONTROL SYSTEM**	View / Download

© 2023 IKIO LED LIGHTING. All Rights Reserved. Products and technologies in this document may be covered by one or more Patents Pending.
The product images shown are for illustration purposes only and may not be an exact representation of the product. Specifications subject to change without notice.